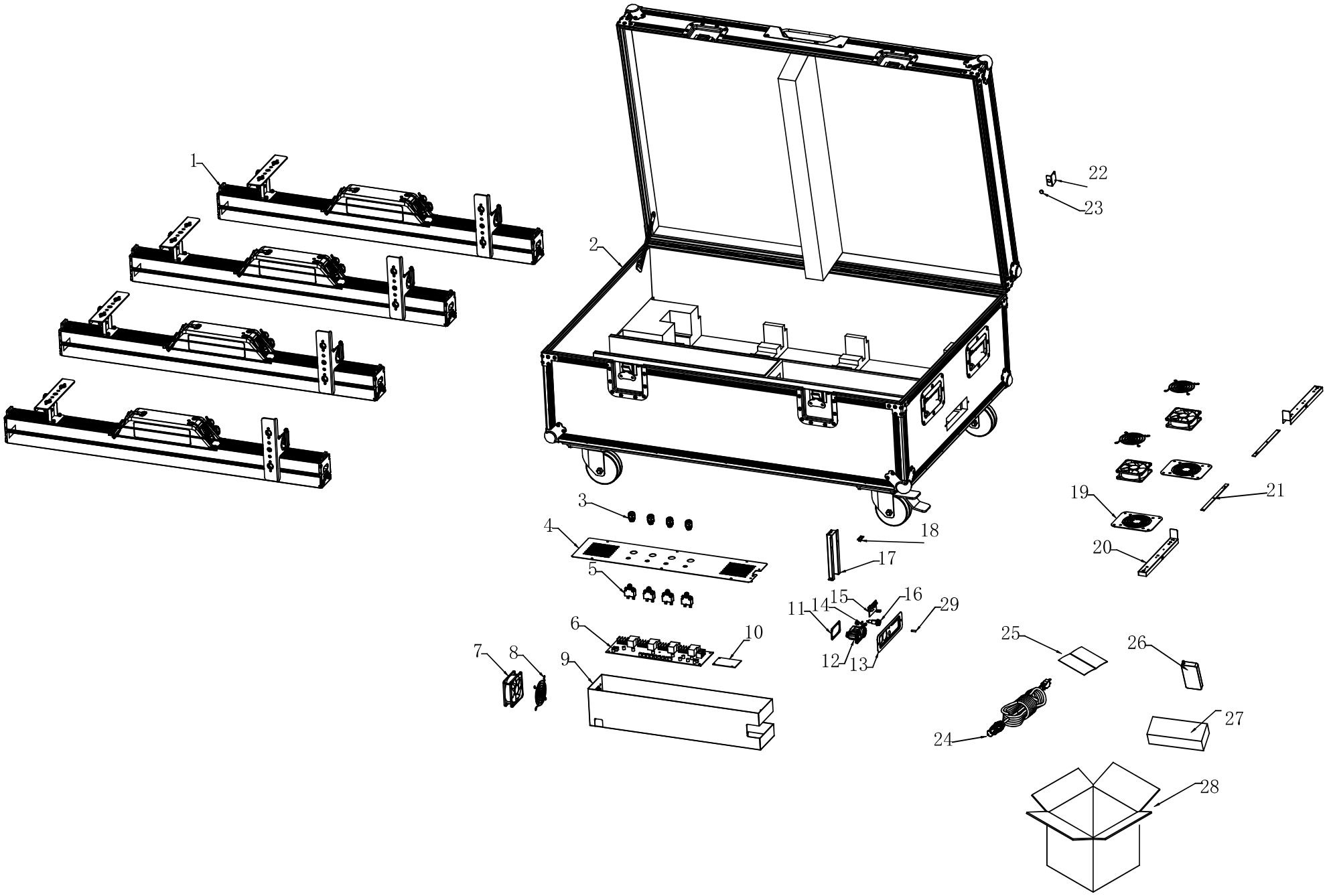
1
2
3
4
5
6
7
8
9
10
11
12
13
14
15
16
17
18
19
20
21
22
23
24
25
26
27
28
29

EXPLODED DIAGRAM REF STATIC	FIXTURE	PART NUMBER	DESCRIPTION
1	WELLBATTEN14X4	PTJ03032163	SINGLE WELLBATTEN14 (BOM#1)
2	WELLBATTEN14X4	PTJ13001738	WELLBATTEN14X4 Complete Road Case with Charger (BOM#2)
2	WELLBATTEN14X4	PTJ55000396E	ROAD CASE (BOM#2)
2	WELLBATTEN14X4	PTJ72000597	Case Lid for the Wellbatten14x4 (included the screws)
3	WELLBATTEN14X4	PTJ33300073	IP CONNECTOR (BOM#3)
4	WELLBATTEN14X4	PTJ61108658C	POWER CABLE HOLDER (BOM#4)
5	WELLBATTEN14X4	PTJ39900125	OVERCURRENT PROTECTOR (BOM#5)
6	WELLBATTEN14X4	PTJ21004126C	MPCB (BOM#6)
7	WELLBATTEN14X4	PTJ33200260B	FAN (BOM#7)
8	WELLBATTEN14X4	PTJ33200015	FAN NET (BOM#8)
9	WELLBATTEN14X4	PTJ61108656D	POWER HOLDER (BOM#9)
10	WELLBATTEN14X4	PTJ33000074	PSU (BOM#10)
11	WELLBATTEN14X4	PTJ61103571A	POWER SOCKET HOLDER (BOM#11)
12	WELLBATTEN14X4	PTJ33300053	IP POWER IN/OUT SOCKET (BOM#12)
13	WELLBATTEN14X4	PTJ61202192A	MOUNTING PLATE FOR POWER SOCKET (BOM#13)
14	WELLBATTEN14X4	PTJ32000117	HM SCREW (BOM#14)
15	WELLBATTEN14X4	PTJ21003204A	INDICATOR LIGHT PCB (BOM#15)
16	WELLBATTEN14X4	PTJ3027001001	FUSE HOLDER (BOM#16)
17	WELLBATTEN14X4	PTJ61011983	Cases Lid for the Wellbatten14x4
17	WELLBATTEN14X4	PTJ61108759B	HALL ELEMENT LOCATER (BOM#17)
18	WELLBATTEN14X4	PTJ21001816	HALL ELEMENT LOCATER J (BOM#18)
19	WELLBATTEN14X4	PTJ61108659	FAN HOLDER (BOM#19)
20	WELLBATTEN14X4	PTJ61108657D	SENSOR MOUNTING PLATE (BOM#20)
21	WELLBATTEN14X4	PTJ21004362	LIGHT SENSATION PCB (BOM#21)
22	WELLBATTEN14X4	PTJ39900054A	MEGNET (BOM#22)
23	WELLBATTEN14X4	PTJ61107735A	MEGNET HOLDER (BOM#23)
24	WELLBATTEN14X4	PTJ23100149B	POWER CABLE (US) (BOM#24)
25	WELLBATTEN14X4	PTJ54001283	QRG (BOM#25)
26	WELLBATTEN14X4	PTJ72000565	RFC REMOTE (BOM#26)
27	WELLBATTEN14X4	PTJ72000136C	OMEGA BRACKET (BOM#27)
28	WELLBATTEN14X4	PTJ52002695D	OUTER BOX (BOM#28)
29	WELLBATTEN14X4	PTJ49900016	FUSE (BOM#29)
	WELLBATTEN14X4	PTJ61111321	Locking Bracket